TX-1860W12FC120-NUFEZW-B04DT

PRODUCT SPECIFICATION

Features:

◆Excellent transiting heat from LED chip operating under 1200 mA.

◆Ceramic eutectic package allows it to have minimal internal stress and excellent thermal path.

◆Flip chip coated with package, the output of lumen is stable.

◆High luminous output.

◆Encapsulated materials are environmentally certified and meet environmental requirements.

Chip Material:

◆GaN

Emitting Color:

◆cold white

Applications:

◆Automobile lighting

Package Dimensions:

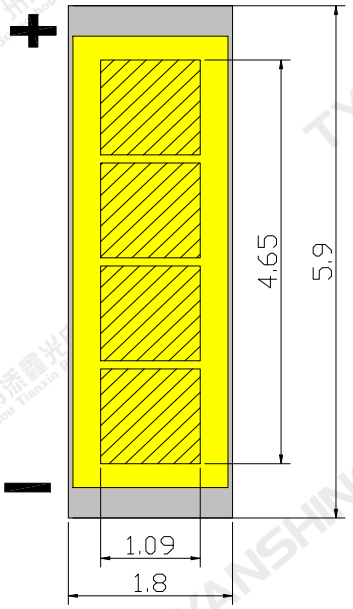

Top view

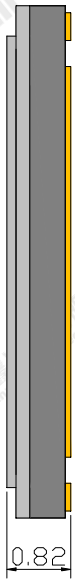

Side view

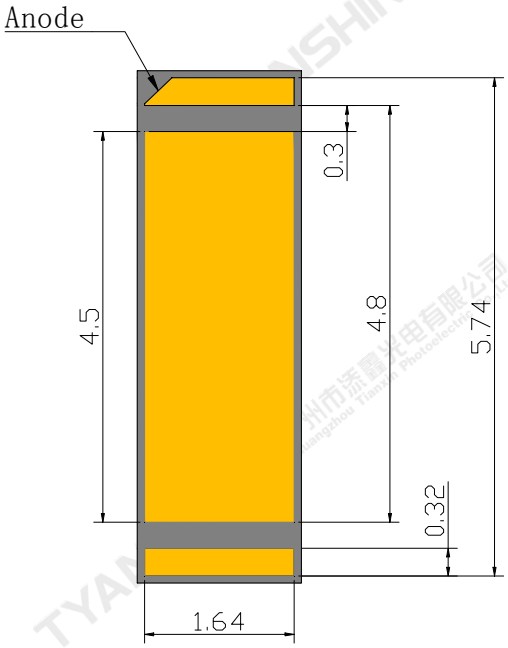

Bottom view

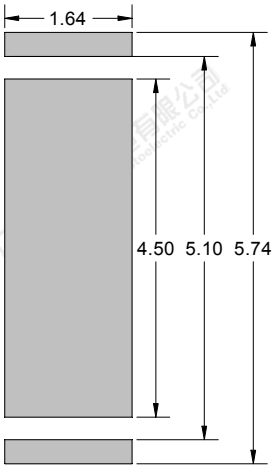

Recommended solder pad

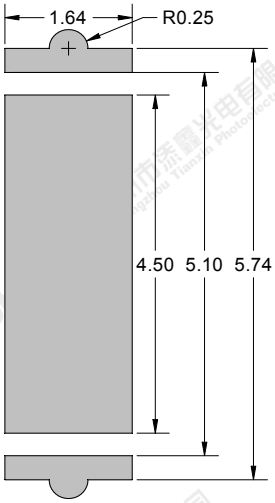

recommended stencil pattern

Notes:

1.All dimensions are in millimeters .

2.Tolerances unless otherwise mentioned are ±0.1mm .

Absolute Maximum Ratings (Tc=25℃)

Parameter	Symbol	Ratings	Unit
Forward Current	IF	1200	mA
Reverse Voltage	V_R	Not designed for reverse operation	V
Power Dissipation	P_D	16.8	W
Junction Temperature	Tj	150	℃
Electrostatic Discharge Threshold (ESD)	ESD	2000	V
Storage Temperature	T_{stg}	-40~+70	℃
Operation Temperature	T_{opr}	-30~+125	

Notes:

1.Specifications are subject to change without notice.

2.The data on this specification is for reference only and the actual data is in accordance with the acknowledgment.

3.Precautions for ESD:

STATIC SHIELD Electricity and surge damages the LED. It is recommended to use a wrist band or anti-electrostatic glove when handling the LED. All devices, equipment and machinery must be properly grounded.

Electrical Optical Characteristics (Tc=25°C)

Parameter	Symbol	Condition	Min.	Typ.	Max.	Units
Luminous Flux	φ_v	If=1000mA	1300	1400	1550	lm
Forward Voltage	V_f		11.0	13.0	14.0	V
Correlated Colour Temperature	CCT		5300	6000	6700	K
Viewing Angle at 50％IV	$2\theta_{1/2}$	—	—	120	—	Deg
Reverse Current	I_R	V_R=5V	—	—	—	μA
Thermal Resistance Junction to Case	$R\theta_{J-C}$	—	—	0.8	—	K/W
Temperature Coefficient of Voltage	V△F/T	If=1000mA	—	-4.8	—	mV/℃

White Color coordinate filing (IF=1000mA)

Region	CCT Range		X1	Y1	X2	Y2	X3	Y3	X4	Y4
	Min	Max								
G12	5300	5500	0.3375	0.3626	0.3322	0.3527	0.3322	0.3710	0.3378	0.3813
G10	5500	5800	0.3322	0.3517	0.3255	0.3395	0.3251	0.3564	0.3322	0.3696
F01	5800	6300	0.3251	0.3367	0.3169	0.3237	0.3155	0.3373	0.3251	0.3550
E11	6300	6700	0.3170	0.3227	0.3116	0.3141	0.3096	0.3264	0.3157	0.3359

Notes:

1.Luminous intensity is measured with a light sensor and filter combination that approximates the CIE eye-response curve.

2.$\theta_{1/2}$ is the off-axis angle at which the luminous intensity is half the axial luminous intensity.

3.The dominant wavelength (λd) is derived from the CIE chromaticity diagram and represents the single wavelength which defines the color of the device.

4.Luminous flux measurement tolerance:±15%.

5.Forward voltage measurement tolerance:±0.15V.

Typical Electrical/Optical Characteristics Curves

(25℃ Ambient Temperature Unless Otherwise Noted)

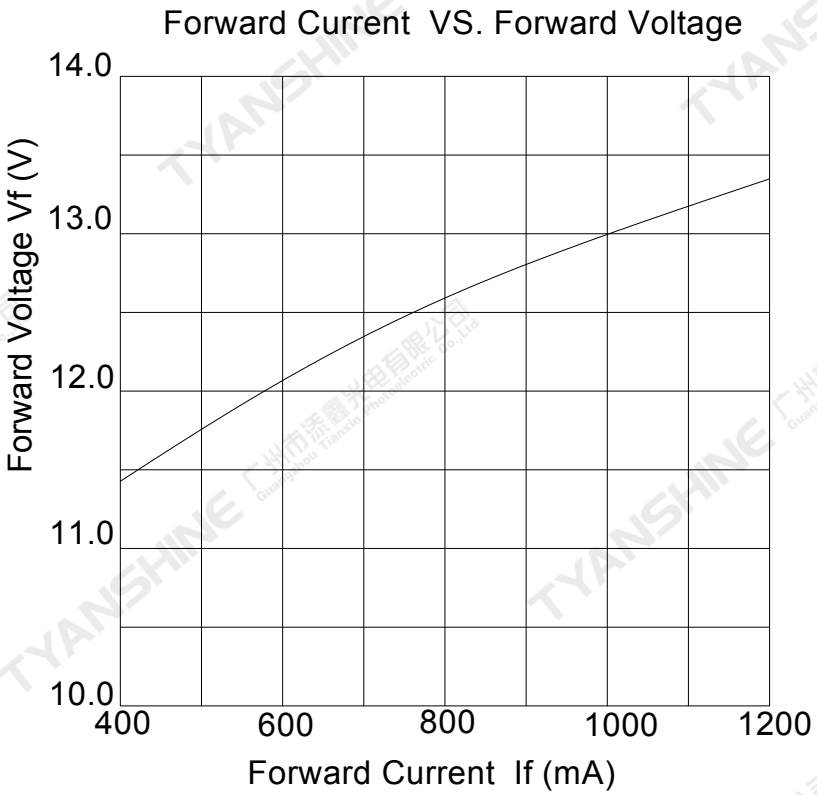

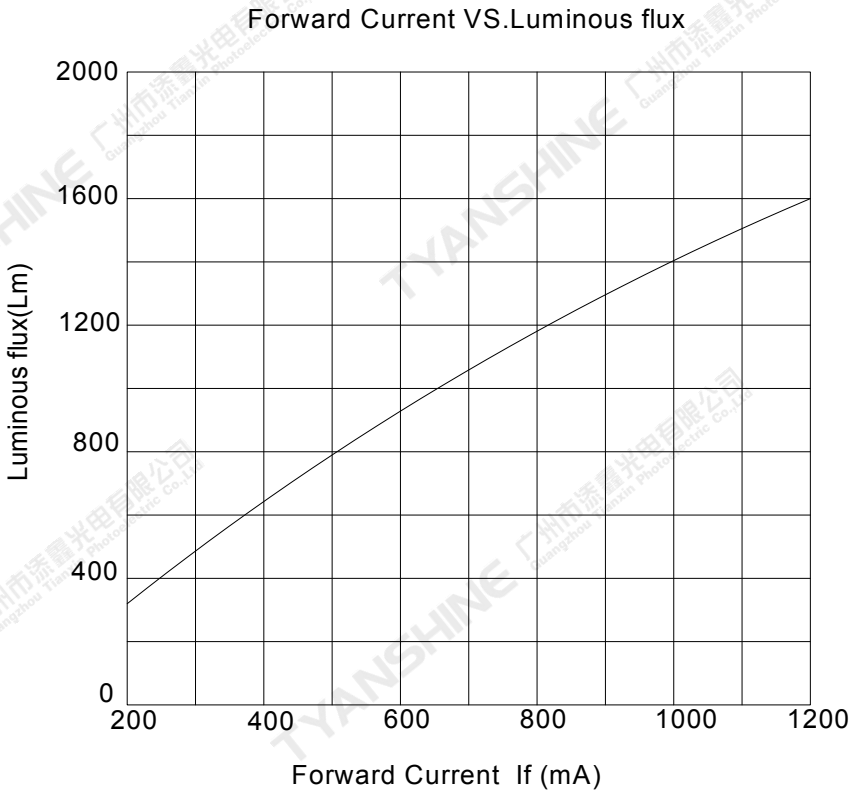

Temperature VS. Relative color temperature (IF=1000mA)

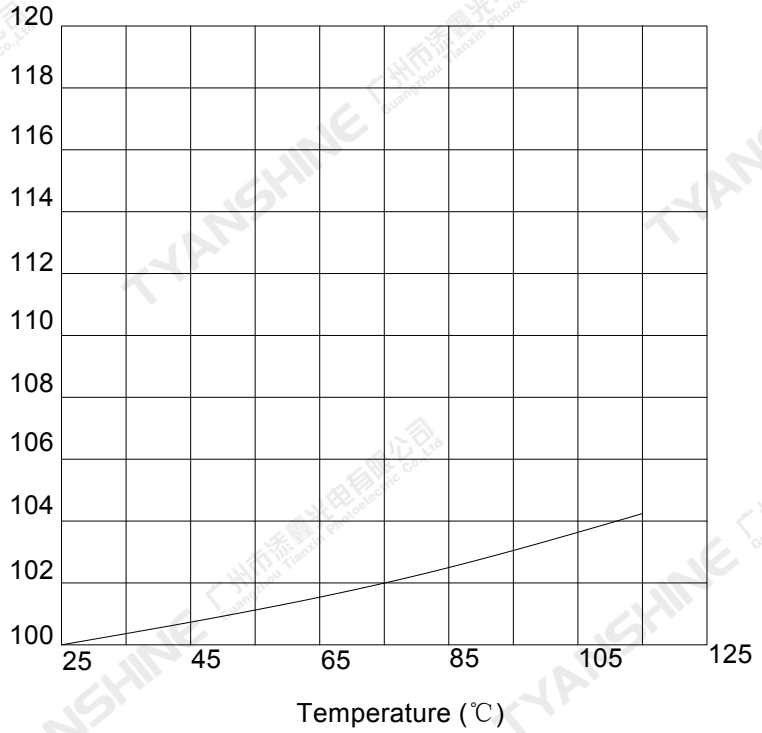

Temperature VS. Relative Luminous Flux (IF=1000mA)

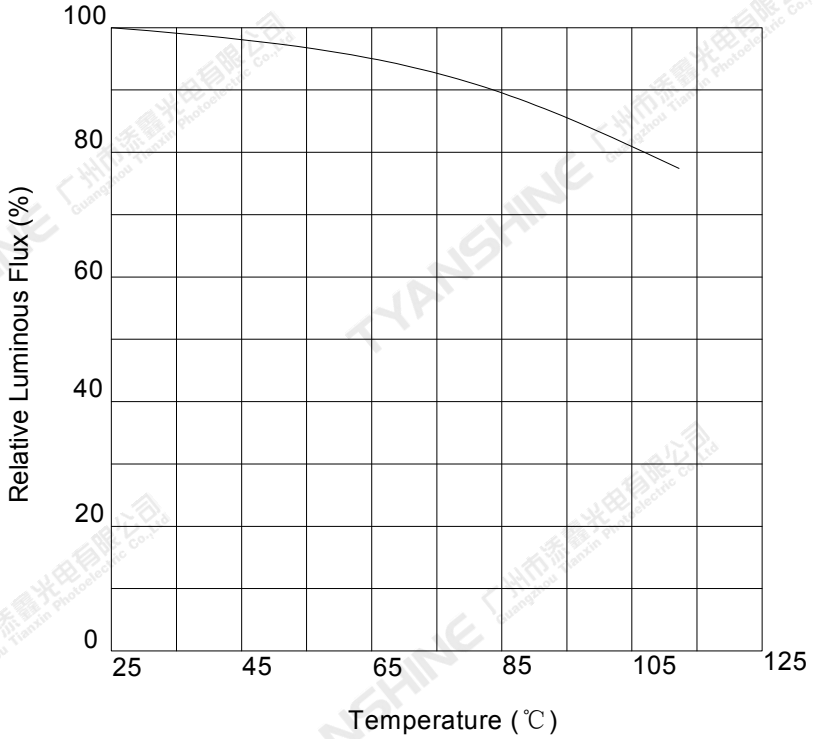

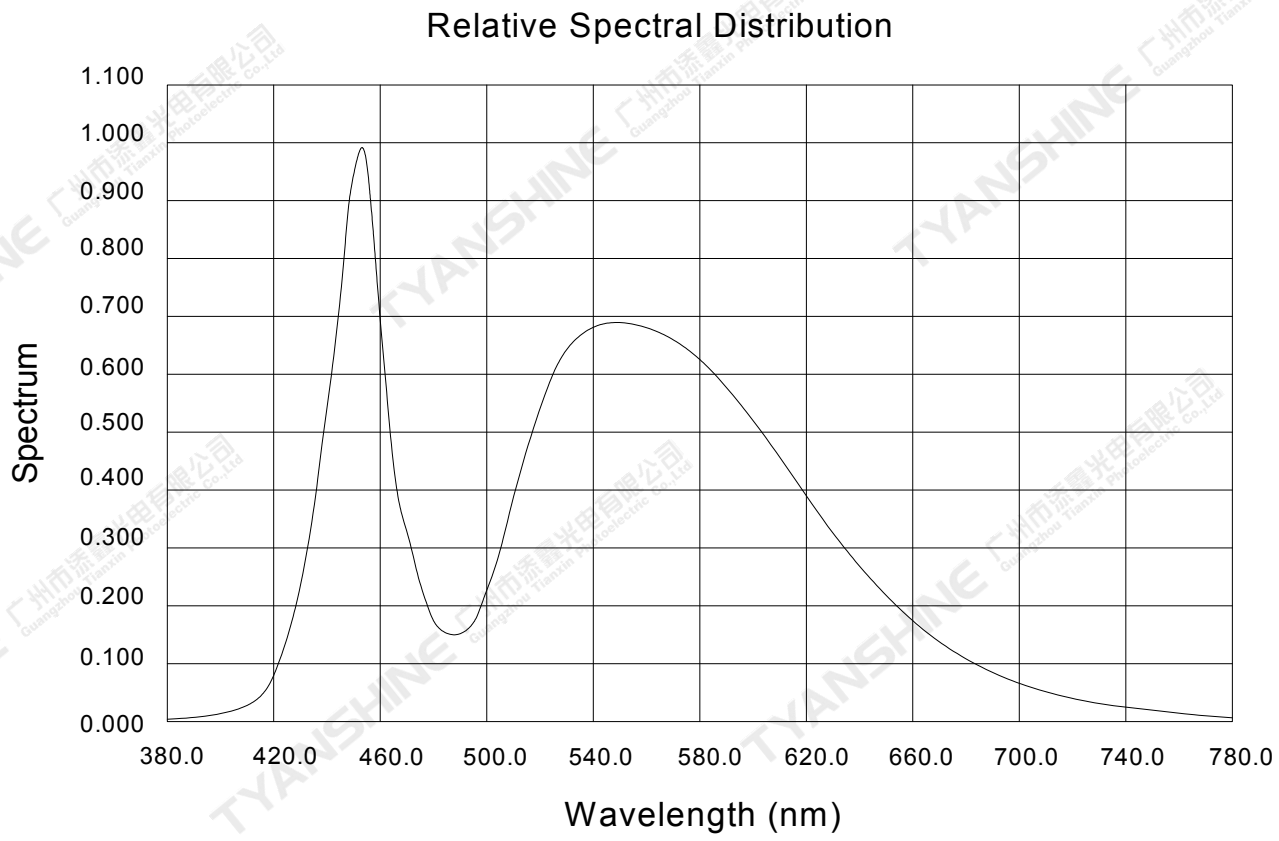

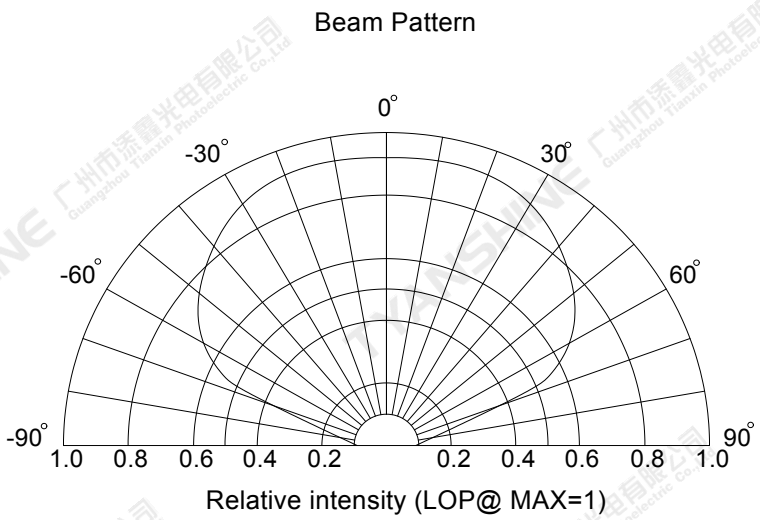

Notes:

1. 2θ 1/2 is the off axis angle from lamp centerline where the luminous intensity is 1/2 of the peak value.
2. View angle tolerance is ± 5°.

Usage Precautions

Storage Environment Condition

Temperature: 5℃ ~ 30℃ (41℉ ~ 86℉)

Humidity: 60% RH Max.

Soldering Condition

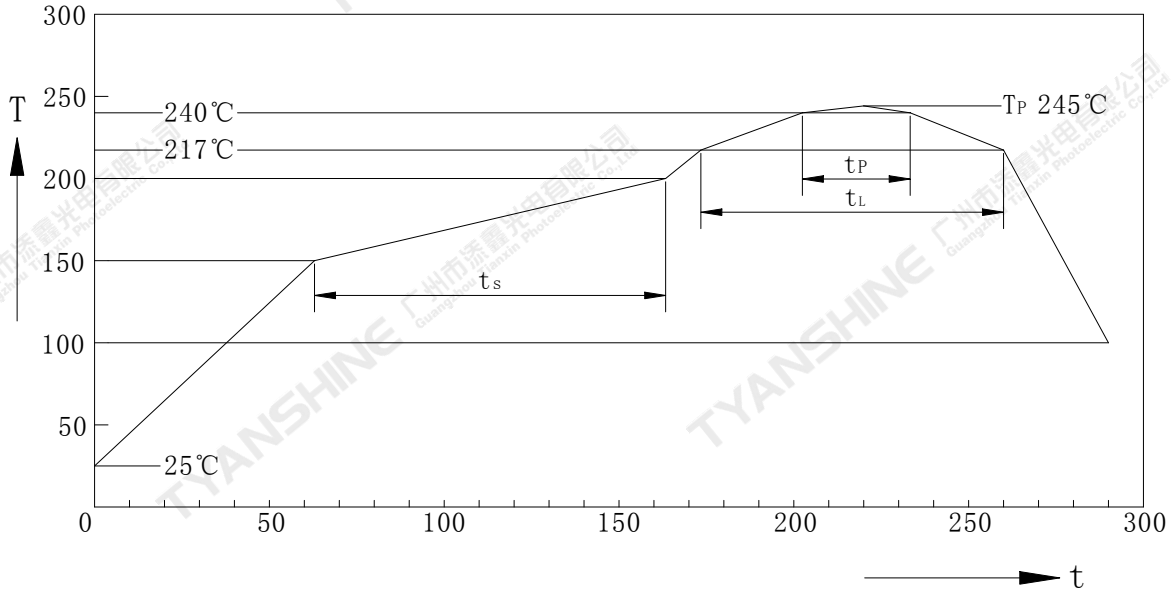

Profil-Charakteristik Profile Feature	Symbol	Pb-Free(SnAgCu)Assembly			Einheit Unit
		Minimum	Recommendation	Maximum	
Ramp-up Rate to Preheat 25℃ to 150℃	-	-	2	3	K/s
Time t_s T_{Smin} to T_{Smax}	t_s	60	100	120	s
Ramp-up Rate to Peak T_{Smax} to T_p	-	-	2	3	K/s
Liquidus Temperature	T_L	217			℃
Time above Liquidus temperature	t_L	-	80	100	s
Peak Temperature	T_P	-	245	260	℃
Time within 5℃ of the specified peak temperature T_p-5 K	t_P	10	20	30	s
Ramp-down Rate T_p to 100℃	-	-	3	6	K/s
Time 25℃ to T_p	-	-	-	480	-

Note:

All temperatures refer to topside of the package, measured on the package body surface.

Dimensions For Cannulation And Packaging

Quantity: 3000PCS

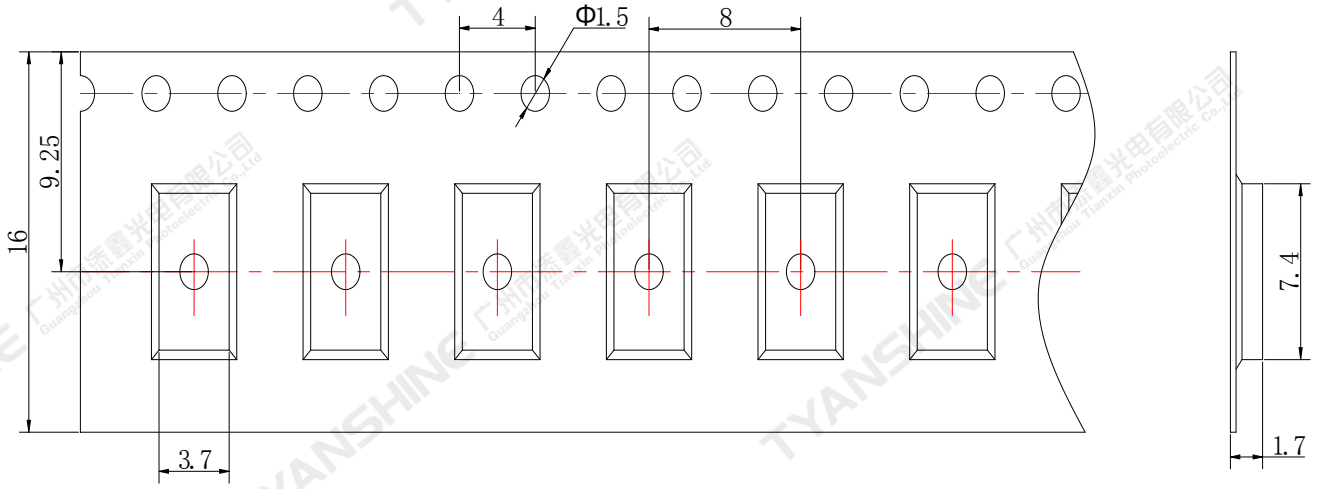

Notes:

1. All dimensions are in millimeters.
2. Tolerances are ±2.0 mm unless otherwise noted.
3. The products are packaged together with silica gel, Transport, not to the weight of welding LED light-emitting area, As a result of the weight of LED light-emitting zone in the quality of, Irresponsible of the Company.